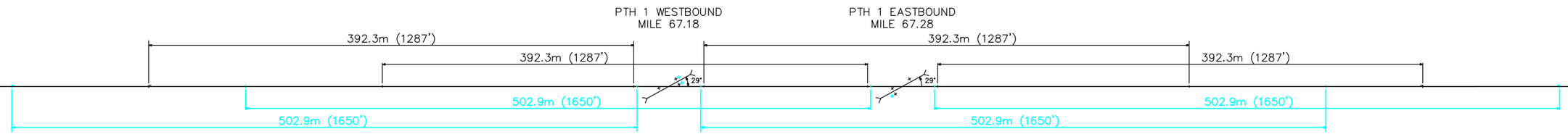

LOCATION PLAN
TRACK SCALE: 1:3500

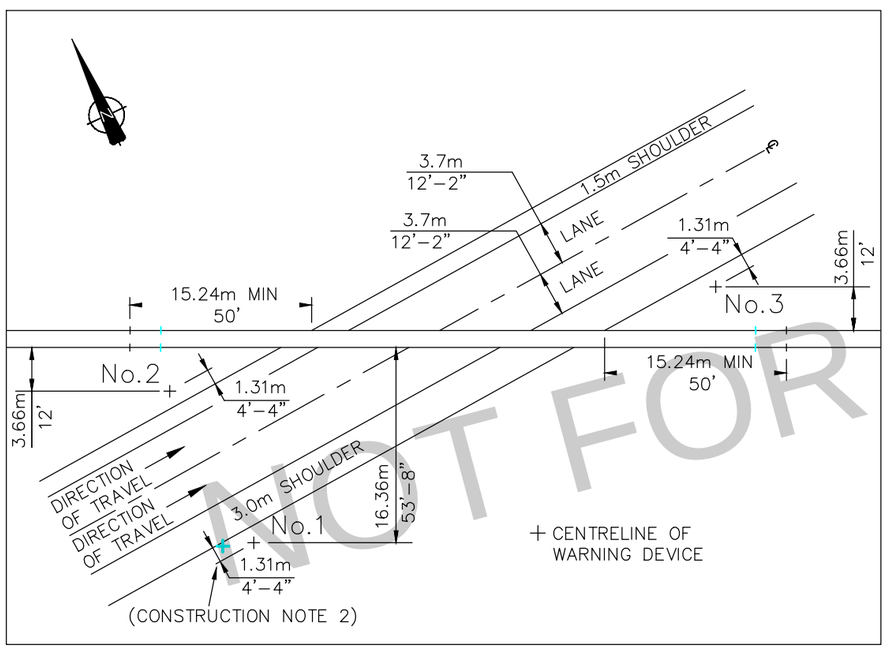

DETAIL OF CROSSING
SCALE: 1:500

CONSTRUCTION NOTES:

1. LOCATION OF EXISTING INSULATED JOINTS TO BE REMOVED IS APPROXIMATE.
2. EXISTING CANTILEVER TO BE DEMOLISHED.

NOTES:

1. DESIGN SPEED 25 M.P.H.
2. CLEARANCE DISTANCE 135 FEET MAXIMUM.
3. APPROACH CIRCUIT DISTANCE PROVIDES FOR:
   MINIMUM WARNING TIME 33 SEC.
   EQUIPMENT REACTION TIME 2 SEC.

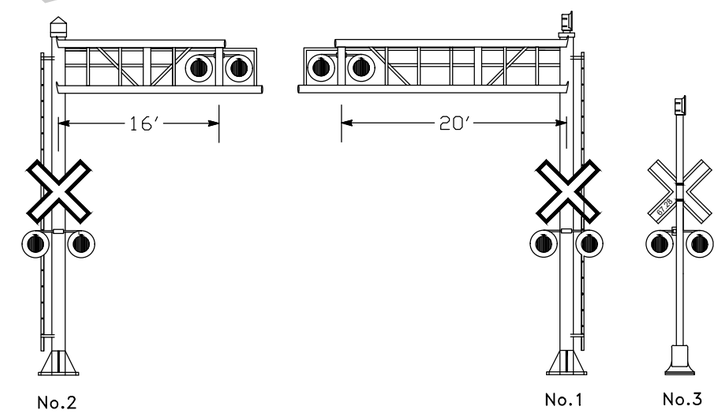

PTH 1 EASTBOUND
Mi. 67.28

BLUE = OUT

NOT FOR CONSTRUCTION

NO.	REVISIONS	DATE	BY
0	ISSUED FOR TENDER	2020-01-31	WSP

B.M.
ELEV.
CONSTRUCTION COMPLETION DATE: YYYY MM DD

wsp

DESIGNED BY	JAB(WSP)	CHECKED BY	HH(WSP)
DRAWN BY	JAB(WSP)	APPROVED BY	RY(WSP)
SCALE: HORIZONTAL	AS SHOWN	RELEASED FOR CONSTRUCTION	
VERTICAL	AS SHOWN		
DATE	2020 01 31	DATE	YYYY-MM-DD

PLOT DATE: 2020 01 31

ENGINEER'S SEAL

CONSULTANT DRAWING NUMBER
GWWD067.23PA003_SW

BID OPPORTUNITY: XXX-20XX
CONTRACT NUMBER: X

Winnipeg

THE CITY OF WINNIPEG

WATER AND WASTE DEPARTMENT
ENGINEERING DIVISION

THE GREATER WINNIPEG WATER DISTRICT RAILWAY
PTH 1 HIGHWAY CROSSING WARNING SYSTEMS Mi.67.18 & Mi.67.28

Mi.67.28 EASTBOUND SINGLE LINE TRACK PLAN

SHEET 3 OF 20

CITY DRAWING NUMBER
1-0754R-E0003-001

FILE PATH: C:\Users\cajb069559\OneDrive - WSP O365\My Documents\5 - Winnipeg Crossings\Design\CAD\
FILE NAME: GWWD067.23PA003_SW.dwg